City of Prince George
HISTORY SHEET

SHEET NUMBER 15 of 53 ROLL NUMBER 023206489

Legal: LOT 15 BLOCK D.L. 1599 PLAN 39361

Address: #6975 WESTGATE PLACE

Sanitary Connection:# SIZE: 100mmø MATERIAL: PVC INV. CONNECTED

Water Connection:# SIZE 19mmø MATERIAL COPPER METER

Storm Connection:# SIZE 100mmø MATERIAL PVC INV. CONNECTED

Cash Receipt No's: WATER SANITARY STORM

CURB FROM PROPERTY LINE 5.0m PAVEMENT WIDTH 10.0m

B.C. HYDRO 75øMM DB2 U/G CONNECTION

B.C. TELEPHONE 100øMM U/G CONNECTION

B.C. GAS 42ø mm

Information Sheets: REF. DWGS. L&M ENGINEERING LTD. JOB. 1064-01-02

Comments: BENCH MARK: MON.86H1746 ON HWY 16W NORTH OF INT ELV. 731.371m

THE INFORMATION CONTAINED HEREIN IS FOR INTERNAL USE ONLY.
NOT TO BE RELIED UPON UNLESS CONFIRMED BY THE SITE INSPECTION AND/OR INVESTIGATION

N
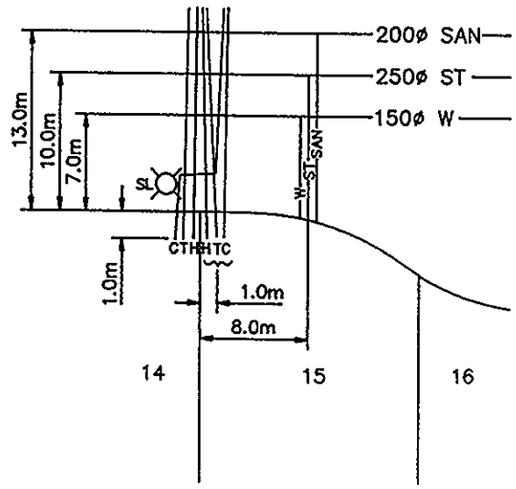
GAS MAIN 1m OFFSET FROM PROPERTY LINE