City of Prince George
HISTORY SHEET

013955136

SHEET NUMBER **Roll Number**

Legal: LOT'S 3 BLOCK D.L. 2440 PLAN 1338 EXCEPT

Address: 193 ONGMAN RD. (BRUNO MEYER)

Sanitary Connection: # 11464 SIZE 6" MATERIAL A.C. INV. CONNECTED

Water Connection # SIZE MATERIAL METER CONNECTED

Storm Connection: # SIZE MATERIAL INV. CONNECTED

Cash Receipt No's: WATER SANITARY 0661 STORM

CURB FROM PROPERTY LINE PAVEMENT WIDTH

B.C. HYDRO UNDERGROUND CONNECTION

B.C. TELEPHONE UNDERGROUND CONNECTION

INLAND GAS

Information Sheets:

Comments:
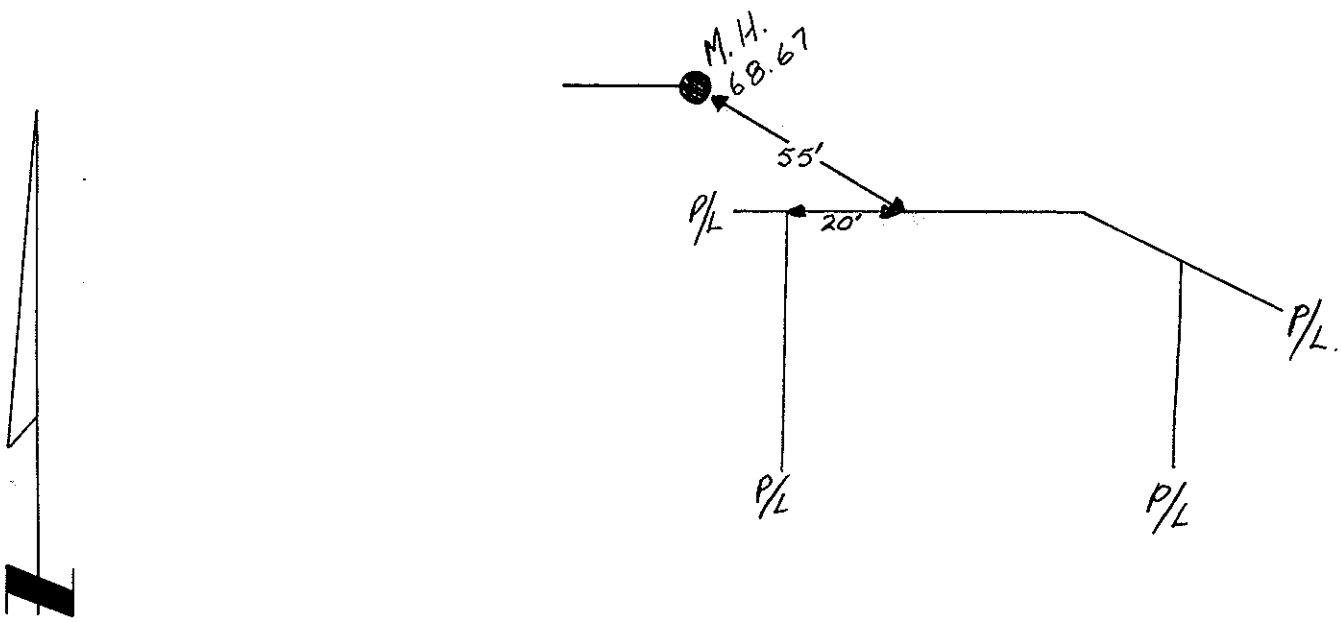
SITE PLAN N.T.S.