City of Prince George
HISTORY SHEET

012040835

SHEET NUMBER № 3372 **Roll Number**

Legal: LOT'S 528 BLOCK D.L. 936 & 2507 PLAN 15185

Address: 1135 Mc GREGOR AVE.

Sanitary Connection: # 4742 SIZE MATERIAL INV. CONNECTED

Water Connection # 4742 SIZE 20 mm MATERIAL Cu. METER CONNECTED

Storm Connection: # SIZE MATERIAL INV. CONNECTED

Cash Receipt No's: WATER SANITARY STORM

CURB FROM PROPERTY LINE 18' (5.486 M.) PAVEMENT WIDTH

B.C. HYDRO UNDERGROUND CONNECTION UG

B.C. TELEPHONE UNDERGROUND CONNECTION UG.

INLAND GAS 12 OFFSET (3.657M.)

Information Sheets:

Comments: NO INFORMATION ON SAN SEWER
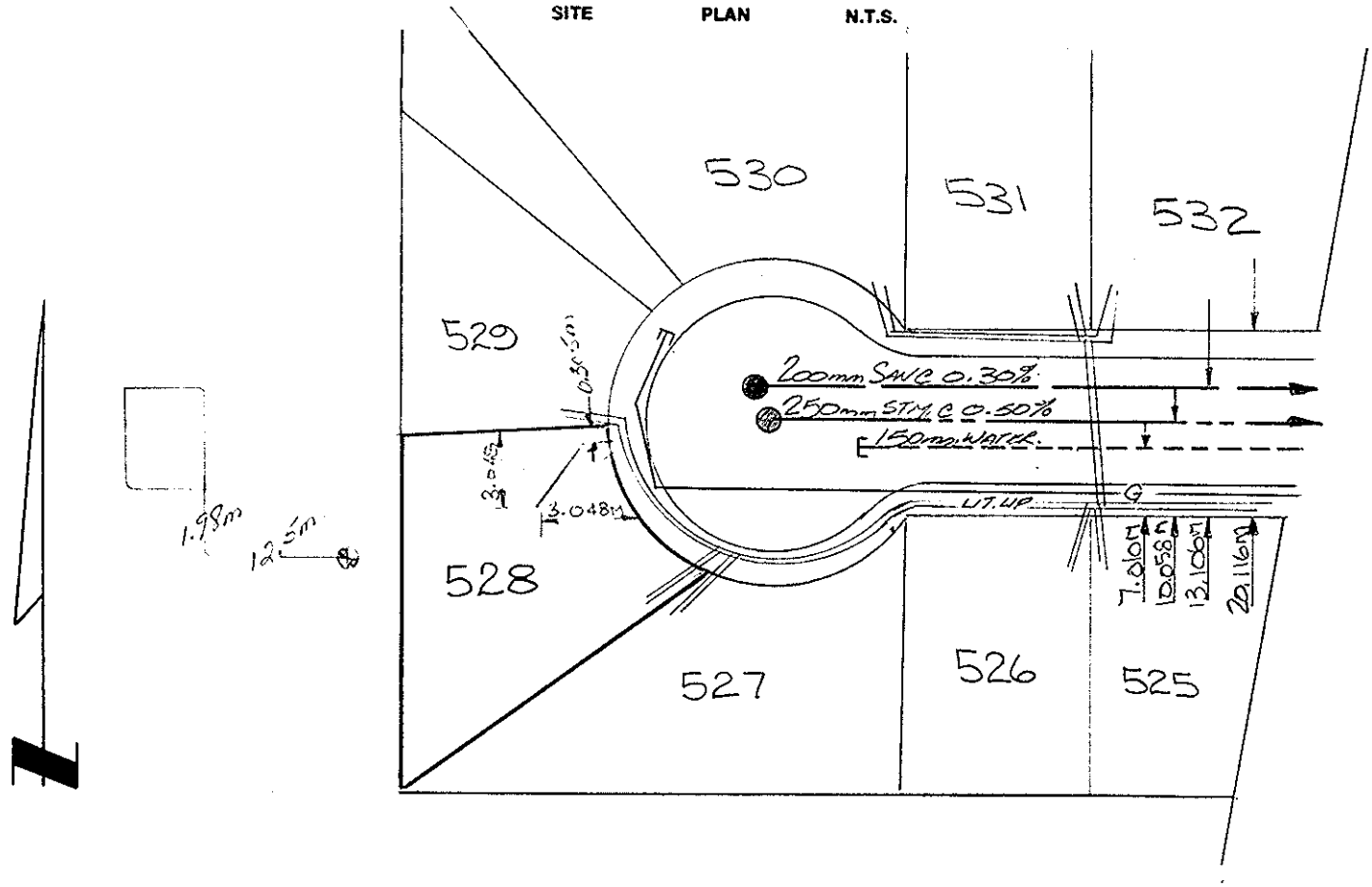
SITE PLAN N.T.S.