City of Prince George
HISTORY SHEET

9 011818883 026

SHEET NUMBER | **Roll Number**

Legal: LOT'S 4 & ½ OF 5 BLOCK 307 D.L. 343 PLAN 1268

Address: 1829 QUEENSWAY

Sanitary Connection: # 1294 SIZE 100 mm MATERIAL A.C INV. 1890.15 CONNECTED

Water Connection # 6360 SIZE 20 mm MATERIAL CU METER CONNECTED

Storm Connection: # — SIZE MATERIAL INV. CONNECTED

Cash Receipt No's: WATER SANITARY STORM

CURB FROM PROPERTY LINE PAVEMENT WIDTH

B.C. HYDRO O.H. UNDERGROUND CONNECTION

B.C. TELEPHONE O.H. UNDERGROUND CONNECTION

INLAND GAS AS SHOWN.

Information Sheets:

Comments:
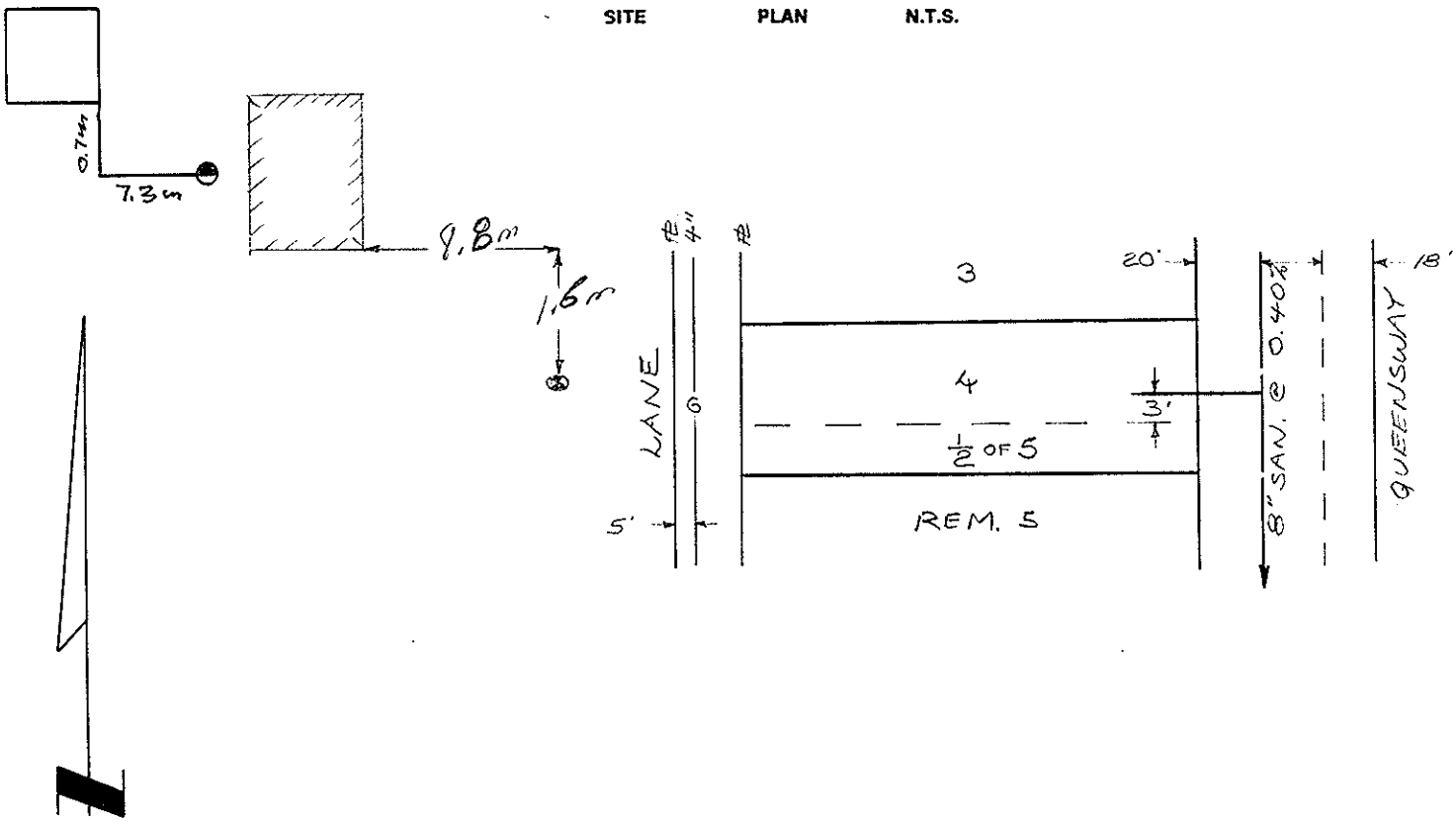
SITE PLAN N.T.S.