City of Prince George
HISTORY SHEET

SHEET NUMBER № 2544 **Roll Number** 010187593

Legal: LOT'S 97 BLOCK D.L. 754 PLAN 20248

Address: 6090 CALEDONIA CRES.

Sanitary Connection: # SIZE 100 MM MATERIAL INV. CONNECTED

Water Connection # SIZE 19 MM MATERIAL CU METER CONNECTED

Storm Connection: # SIZE MATERIAL INV. CONNECTED

Cash Receipt No's: WATER SANITARY STORM

CURB FROM PROPERTY LINE PAVEMENT WIDTH

B.C. HYDRO UPG - 213 UNDERGROUND CONNECTION

B.C. TELEPHONE UG UNDERGROUND CONNECTION

INLAND GAS AS SHOWN

Information Sheets:
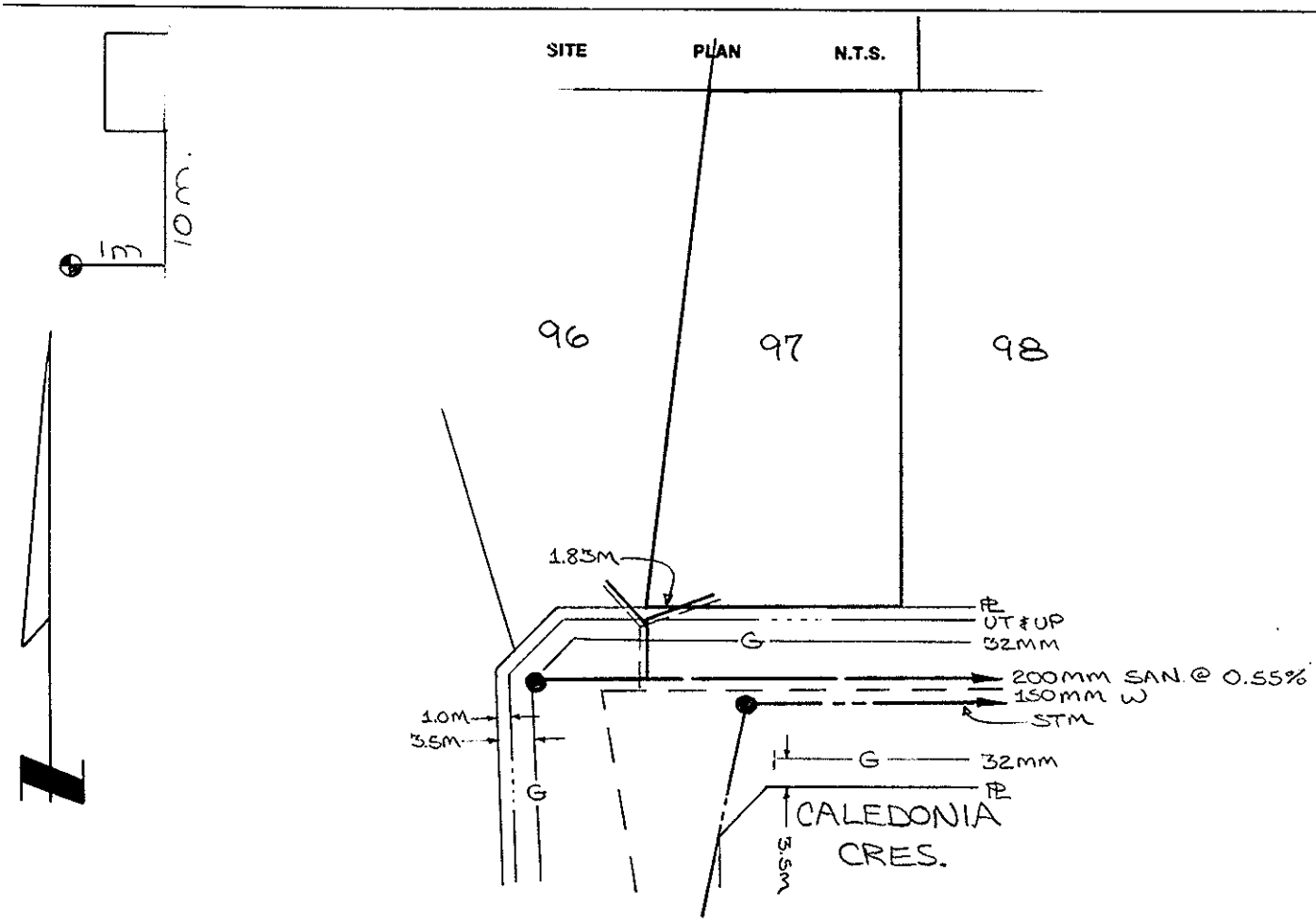
Comments: