City of Prince George
HISTORY SHEET

SHEET NUMBER **Roll Number** 0100847 54

Legal: LOT'S 84 BLOCK D.L. 2507 PLAN 20259

Address: 4343 ANTLER AVE.

Sanitary Connection: # 8178 SIZE 100mm MATERIAL A.C. INV. CONNECTED

Water Connection # 8178 SIZE 20 mm MATERIAL CU. METER CONNECTED

Storm Connection: # SIZE MATERIAL INV. CONNECTED

Cash Receipt No's: WATER SANITARY STORM

CURB FROM PROPERTY LINE 4.877 m PAVEMENT WIDTH 10.363

B.C. HYDRO U/G UNDERGROUND CONNECTION

B.C. TELEPHONE U/G UNDERGROUND CONNECTION

INLAND GAS AS SHOWN

Information Sheets:

Comments:
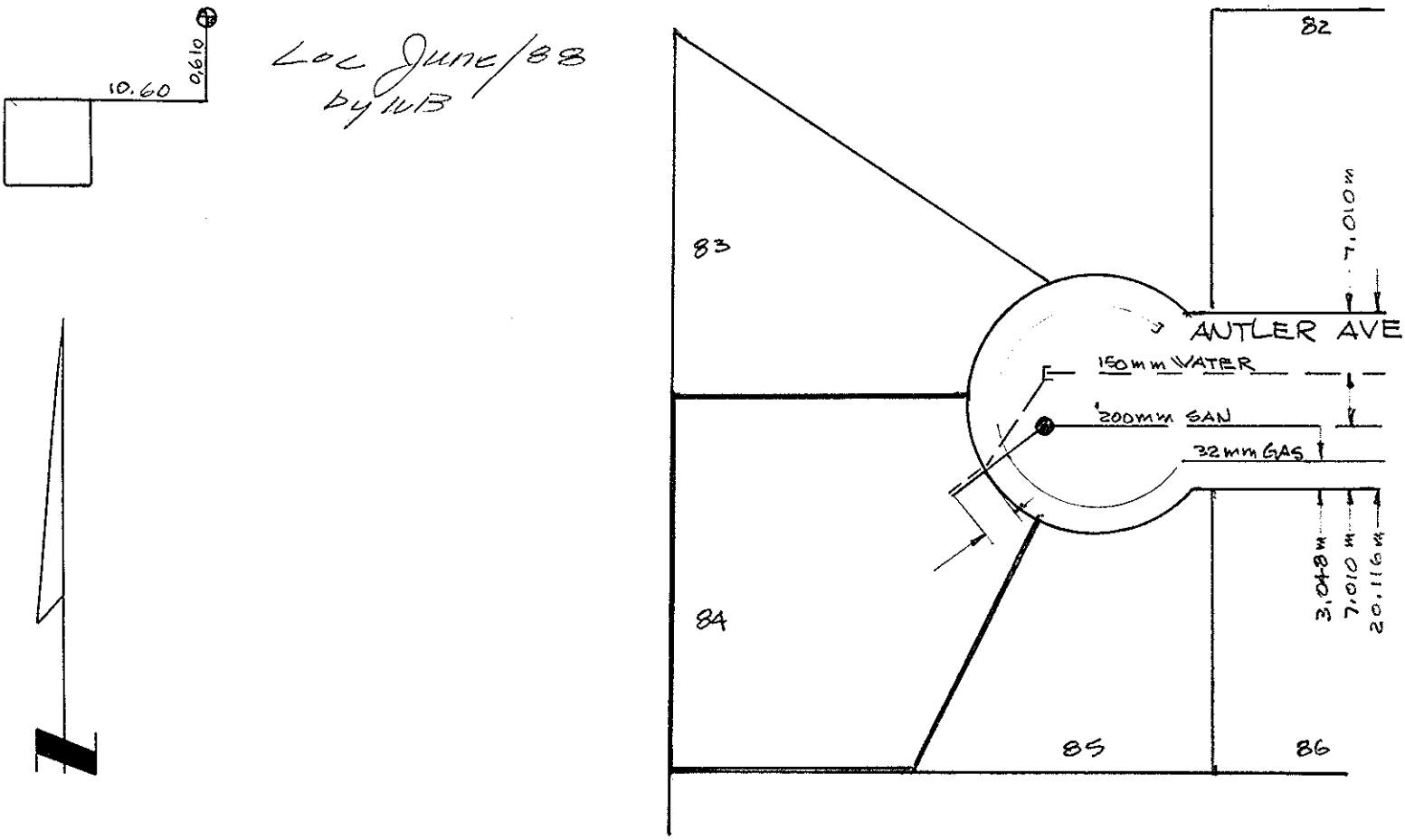
THE INFORMATION CONTAINED HEREIN IS FOR INTERNAL USE ONLY.
NOT TO BE RELIED UPON UNLESS CONFIRMED BY SITE INSPECTION AND/OR INVESTIGATION