City of Prince George
HISTORY SHEET

SHEET NUMBER **Roll Number** 009679693

Legal: LOT'S 57 BLOCK D.L. 754 PLAN 20922

Address: 6668 Essex Cres.

Sanitary Connection: # SIZE 100mm MATERIAL INV. CONNECTED

Water Connection # SIZE 20mm MATERIAL CU. METER CONNECTED

Storm Connection: # SIZE MATERIAL INV. CONNECTED

Cash Receipt No's: WATER SANITARY STORM

CURB FROM PROPERTY LINE 5.486 m PAVEMENT WIDTH 9.144 m

B.C. HYDRO U/G UNDERGROUND CONNECTION

B.C. TELEPHONE U/G UNDERGROUND CONNECTION

INLAND GAS AS SHOWN

Information Sheets: 3283-3A & UGP 150.

Comments:
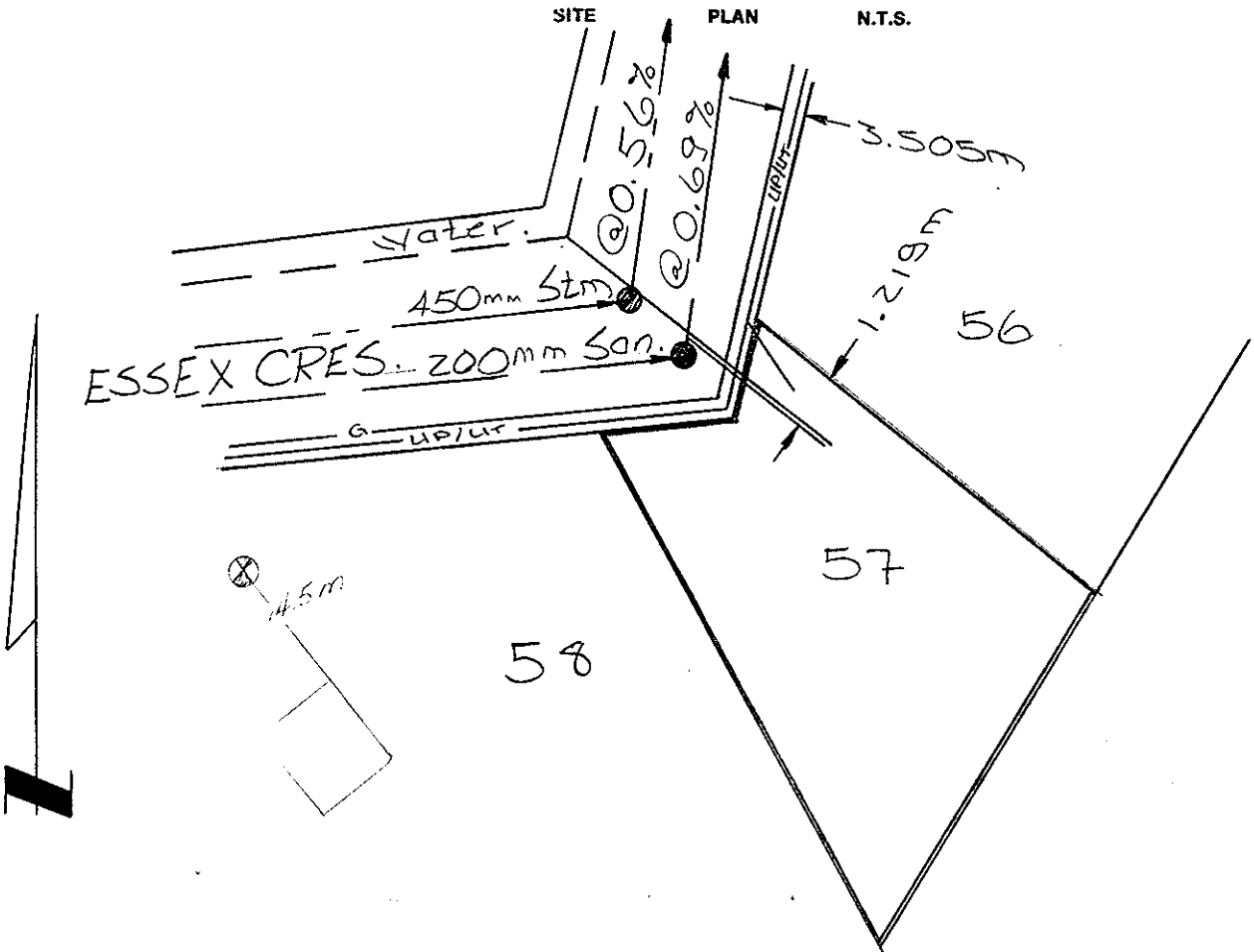
SITE PLAN N.T.S.