City of Prince George
HISTORY SHEET

SHEET NUMBER 10918 **Roll Number** 009568166

Legal: LOT'S 22 BLOCK D.L. 4377 PLAN 21204

Address: 2003 GAGNE PL.

Sanitary Connection: # 13007 SIZE 4" Ø MATERIAL INV. 2135.84 CONNECTED

Water Connection # SIZE 20mm MATERIAL Cu. METER CONNECTED

Storm Connection: # SIZE MATERIAL INV. CONNECTED

Cash Receipt No's: WATER SANITARY 1233 STORM

CURB FROM PROPERTY LINE PAVEMENT WIDTH

B.C. HYDRO UNDERGROUND CONNECTION

B.C. TELEPHONE UNDERGROUND CONNECTION

INLAND GAS

Information Sheets:
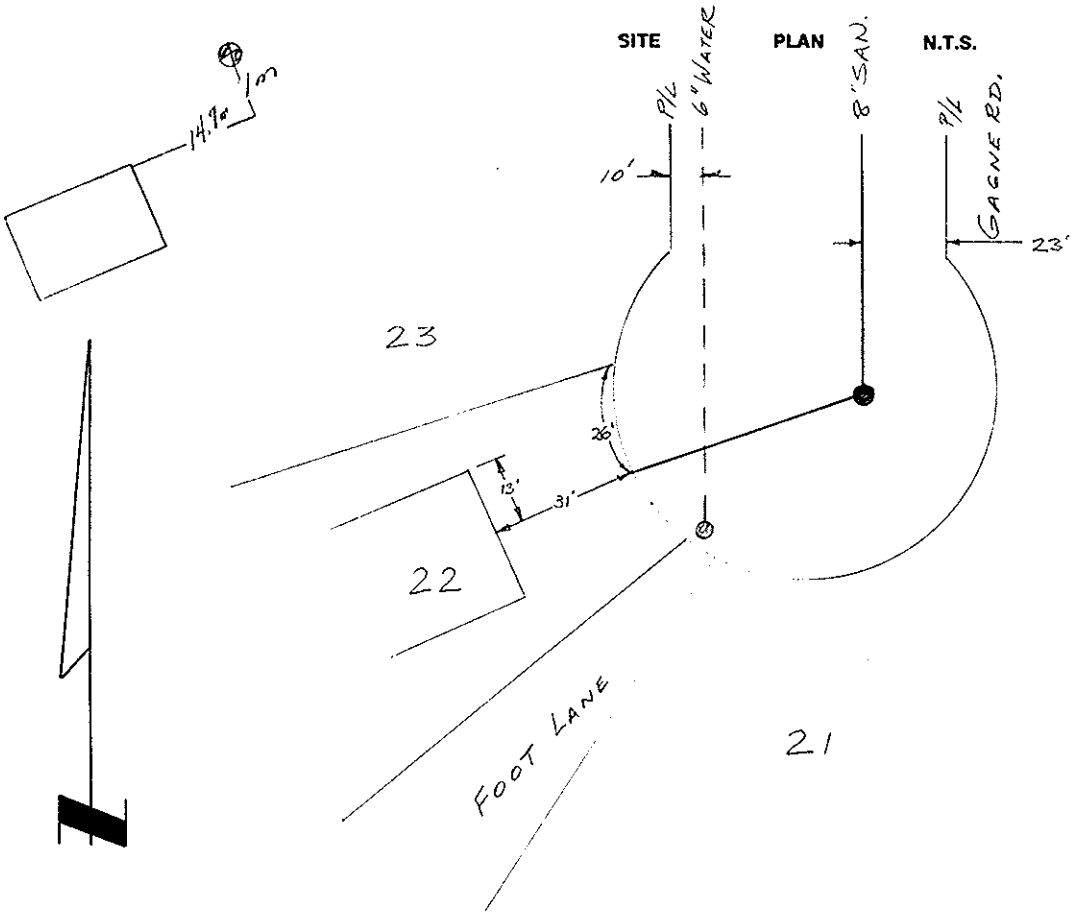
Comments: