City of Prince George
HISTORY SHEET

SHEET NUMBER 10341 **Roll Number** [illegible]

Legal: LOT'S 28 BLOCK D.L. 2433 PLAN 22369

Address: 7122 PEARL PLACE

Sanitary Connection: # SIZE 4" MATERIAL P.V.C. INV. 2440.6 CONNECTED

Water Connection # SIZE 20mm MATERIAL METER CONNECTED

Storm Connection: # SIZE MATERIAL INV. CONNECTED

Cash Receipt No's: WATER SANITARY STORM

CURB FROM PROPERTY LINE PAVEMENT WIDTH

B.C. HYDRO UNDERGROUND CONNECTION

B.C. TELEPHONE UNDERGROUND CONNECTION

INLAND GAS

Information Sheets:

Comments:
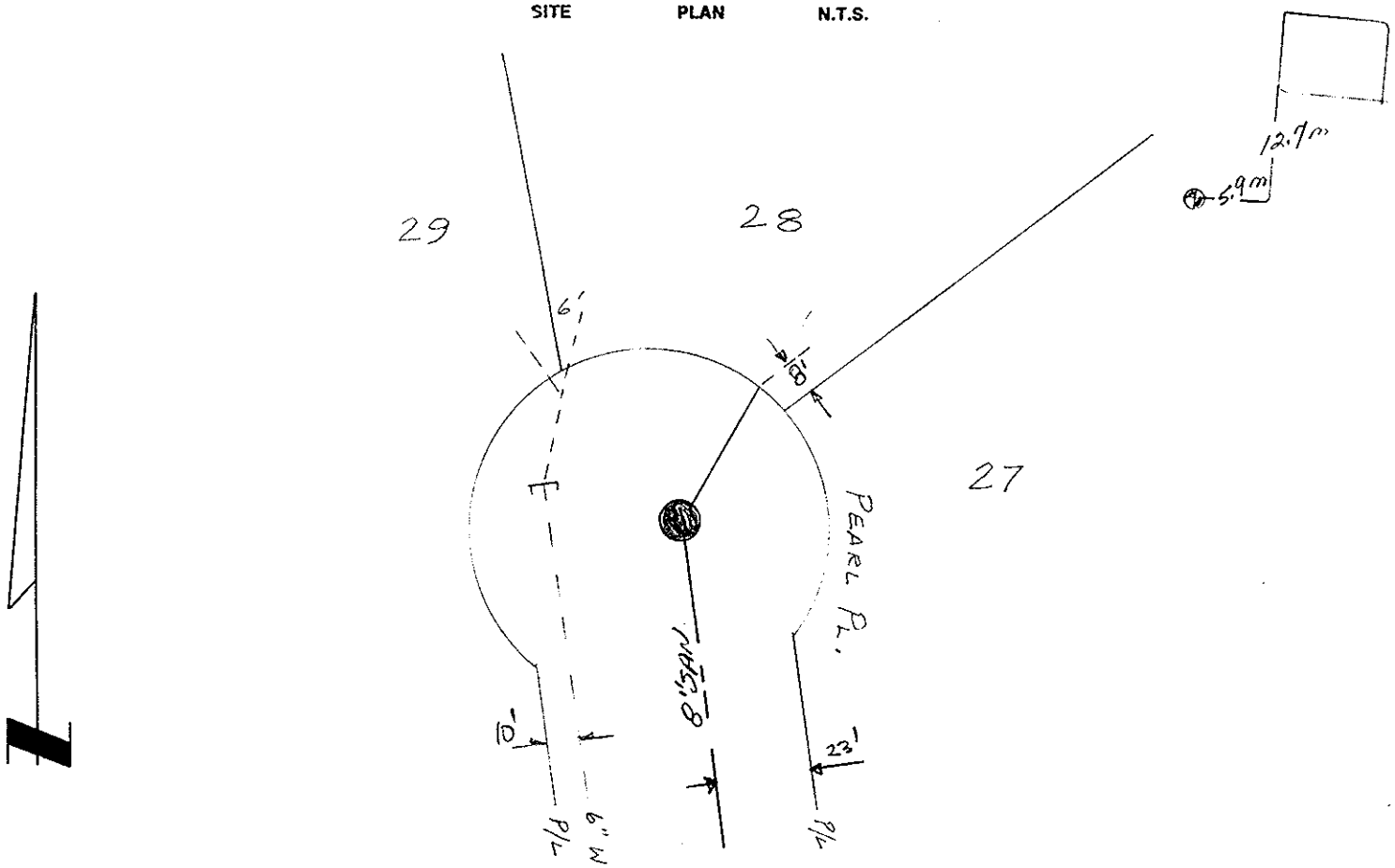
SITE PLAN N.T.S.