City of Prince George
HISTORY SHEET

T.C.

SHEET NUMBER № 3251 **Roll Number** 008771 62

Legal: LOT'S 70 BLOCK D.L. 2507 PLAN 20259

Address: 1249 BOWRON CRES.

Sanitary Connection: # 8164 SIZE 100 mm MATERIAL A.C. INV. 73.64 CONNECTED

Water Connection # 8164 SIZE 20 mm MATERIAL Copper METER CONNECTED

Storm Connection: # SIZE MATERIAL INV. CONNECTED

Cash Receipt No's: WATER SANITARY STORM

CURB FROM PROPERTY LINE PAVEMENT WIDTH

B.C. HYDRO UNDERGROUND CONNECTION

B.C. TELEPHONE UNDERGROUND CONNECTION

INLAND GAS

Information Sheets:

Comments:
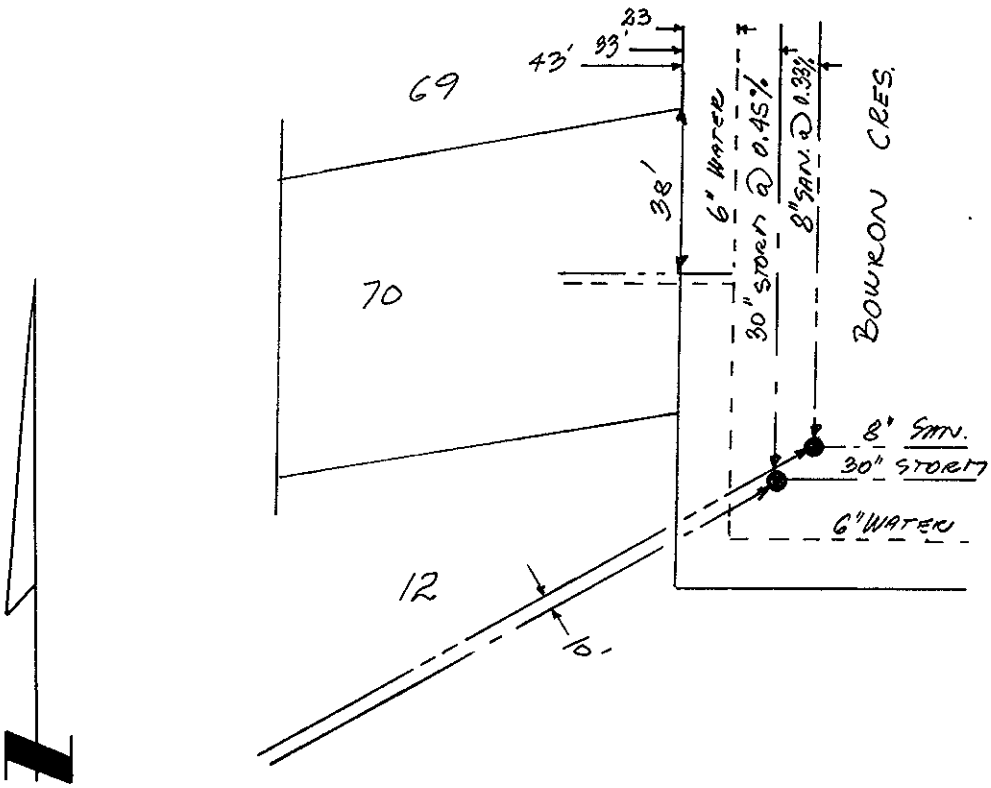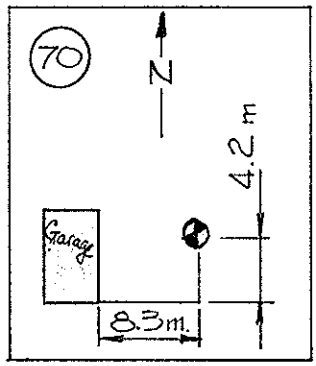
SITE PLAN N.T.S.