City of Prince George
HISTORY SHEET

SHEET NUMBER № 1495 **Roll Number** 585

Legal: LOT'S 15, 16 BLOCK 90 D.L. 937 PLAN 752

Address: 222 DOUGLAS STREET

Sanitary Connection: # 1246 SIZE MATERIAL INV. CONNECTED

Water Connection # 1261 SIZE 3/4" MATERIAL COPPER METER CONNECTED

Storm Connection: # SIZE MATERIAL INV. CONNECTED

Cash Receipt No's: WATER SANITARY STORM

CURB FROM PROPERTY LINE PAVEMENT WIDTH

B.C. HYDRO UNDERGROUND CONNECTION

B.C. TELEPHONE UNDERGROUND CONNECTION

INLAND GAS

Information Sheets:

Comments:
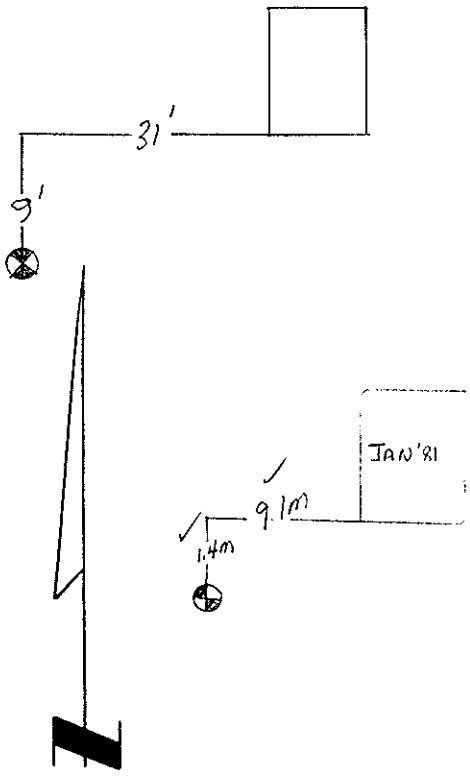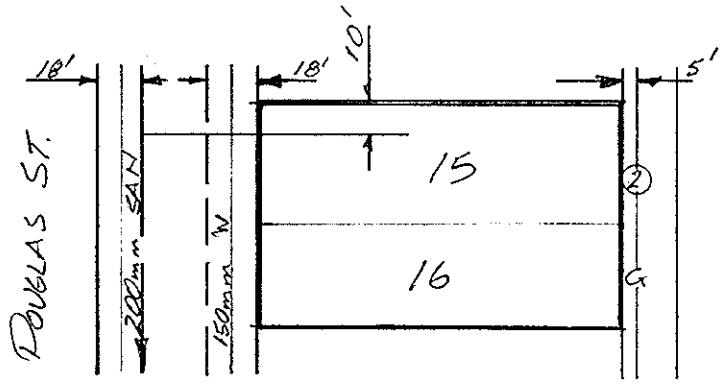
SITE PLAN N.T.S.