5 **City of Prince George** 5 004533151 160

HISTORY SHEET

SHEET NUMBER **3182** **Roll Number**

Legal: LOT'S 5 & 6 BLOCK 341 D.L. 343 PLAN 1268

Address: 1957 KENWOOD ST.

Sanitary Connection: # 1058 SIZE MATERIAL INV. 1891.69 CONNECTED

Water Connection # 1859 SIZE ½" MATERIAL Cu. METER CONNECTED

Storm Connection: # SIZE MATERIAL INV. CONNECTED

Cash Receipt No's: WATER SANITARY STORM

CURB FROM PROPERTY LINE PAVEMENT WIDTH

B.C. HYDRO O.H. UNDERGROUND CONNECTION

B.C. TELEPHONE O.H. UNDERGROUND CONNECTION

INLAND GAS AS SHOWN.

Information Sheets:

Comments:
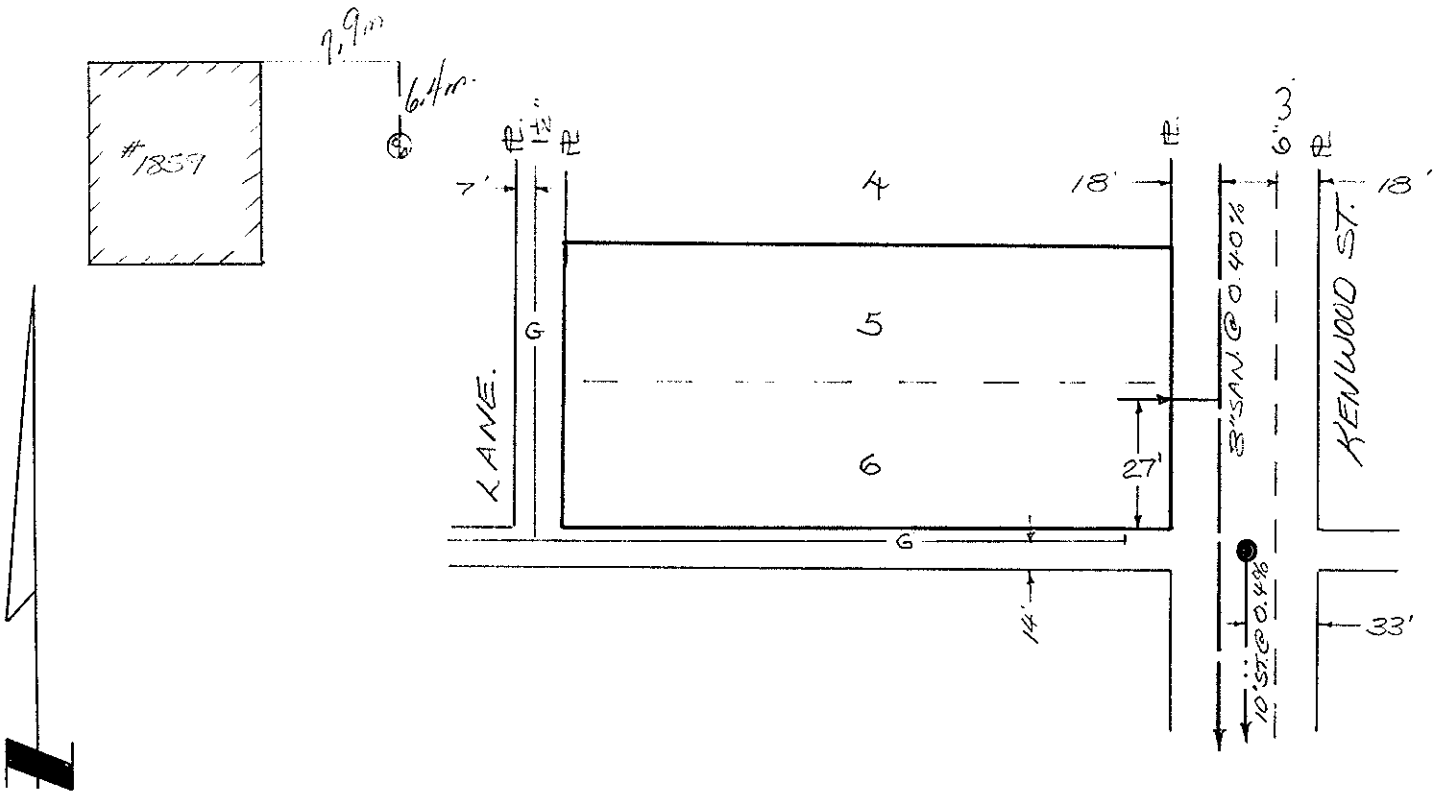
SITE PLAN N.T.S.