City of Prince George
HISTORY SHEET

015 768082

SHEET NUMBER

Roll Number

Legal: LOT'S K BLOCK D.L. 343 PLAN B-612

Address: 1100 PATRICIA BOULEVARD

Sanitary Connection: # 4977 / 2566 SIZE 150mm MATERIAL INV. CONNECTED

Water Connection # 4276 SIZE 25mm MATERIAL Copper METER CONNECTED

Storm Connection: # SIZE MATERIAL INV. CONNECTED

Cash Receipt No's: WATER SANITARY STORM

CURB FROM PROPERTY LINE PAVEMENT WIDTH

B.C. HYDRO UNDERGROUND CONNECTION

B.C. TELEPHONE UNDERGROUND CONNECTION

INLAND GAS

Information Sheets: SEE ENG· DWG· 2175

Comments:

THE INFORMATION CONTAINED HEREIN IS FOR INTERNAL USE ONLY. NOT TO BE RELIED UPON UNLESS CONFIRMED BY SITE INSPECTION AND/OR INVESTIGATION.
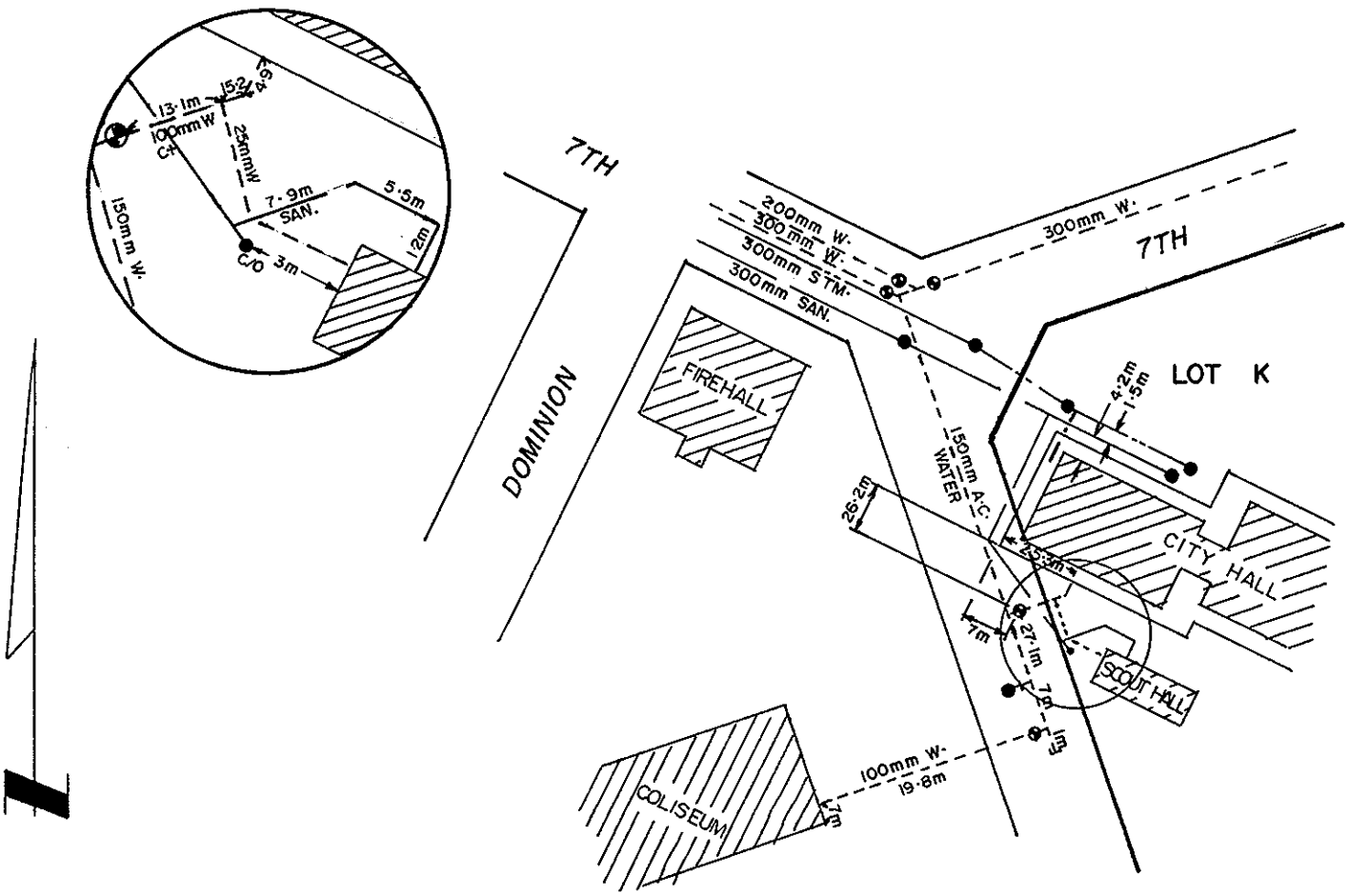
THE INFORMATION CONTAINED HEREIN IS FOR INTERNAL USE ONLY.
NOT TO BE RELIED UPON UNLESS CONFIRMED BY SITE INSPECTION AND/OR INVESTIGATION